Leveraging IoT and TinyML for Smart Battery Management in Electric Bicycles

Thommas Flores*†, Matheus Andrade*†, Morsinaldo Medeiros*†, Miguel Amaral*†, Marianne Silva*†, Ivanovitch Silva*†
* Postgraduate Program in Electrical and Computer Engineering (PPgEEC)
†Federal University of Rio Grande do Norte - Natal, Brazil
Emails:*{thommas.flores.101, matheus.diniz.122, morsinaldo.medeiros.075, miguel.amaral.111}@ufrn.edu.br,*{marianne.silva, ivanovitch.silva}@ufrn.br

***Abstract*—Urban mobility and environmental sustainability are critical challenges intensified by population growth, urbanization, and increased vehicle presence, leading to issues like congestion, pollution, and climate change. To counter this, the urgency for efficient and eco-friendly transportation solutions is evident. Battery Management Systems (BMS) play a central role, overseeing batteries in electronics, vehicles, and energy storage systems for safety and reliability. Focusing on electric bicycles (e-Bikes), the article highlights BMS's role in enhancing cyclist experiences and delves into techniques utilizing energy-efficient hardware and deep learning, notably TinyML, to predict Lithium-Ion battery State of Health (SoH). It examines diverse architectures and parameters, unveiling relationships to guide machine learning model construction, emphasizing delayed feedback integration based on rigorous statistics. The article navigates through data segregation and model training processes, presenting a comprehensive approach that balances sustainability, efficiency, and technological progress in predicting e-Bike battery SoH.**

***Index Terms*—IoT; TinyML; Battery; E-bikes; SoH .**

I. Introduction

Society confronts pressing challenges in urban mobility and environmental sustainability [1], driven by factors like population growth, urbanization, and escalating vehicle numbers, which give rise to issues such as traffic congestion, air pollution, and climate change [2]. As a countermeasure, the demand for effective, eco-friendly transportation solutions has surged [3].

In response, Battery Management Systems (BMS) have emerged as essential components spanning various applications, from portable devices to electric vehicles and energy storage systems [1]. BMSs play a critical role in overseeing, regulating, and ensuring battery safety, efficiency, and reliability.

For electric bicycles (e-Bikes), BMSs are particularly significant, enhancing the rider's experience [4]. E-bikes have gained traction as eco-conscious urban transportation [5], with BMSs integrating monitoring, protection, cell balancing, and connectivity to optimize battery performance and rider safety [6].

Continuous monitoring prevents cell imbalances that can degrade capacity and lifespan. Parameters like State of Charge (SoC), State of Energy (SoE), and State of Power (SoP) are closely tracked for optimal performance [7]. Critical metrics, like State of Health (SoH) for residual capacity and Remaining Useful Life (RUL) for performance longevity, are pivotal [8].

In addition, over the years, various compression algorithms, as in the work of [9], have made it possible to save energy and increase the performance of Internet of Things (IoT) devices. In this landscape [10], TinyML stands out, enabling machine learning on embedded microcontrollers, enhancing BMS functionality [10]. TinyML empowers BMSs to predict energy demand, adjust motor assistance, and maximize e-bike efficiency.

This study introduces novel techniques for Lithium-Ion battery SoH prediction in e-Bikes. Leveraging energy-efficient hardware and deep learning, particularly TinyML, this study analyzes architectures using parameters like current, voltage, temperature, and SoH feedback. Evaluation metrics, including MAE, MSE, and R^2-score , quantify model performance. This paper explores memory and inference times across development boards like ESP32, Arduino NANO Ble Sense 33, and Arduino Portenta H7.

Taking into account the contributions of the previously mentioned research, several key aspects stand out: (a) An in-depth investigation into the effects of temperature and feedback on the accuracy of State of Health (SoH) estimation; (b) A comprehensive comparison of the performance achieved by various quantization methods applied to the most effective architecture; (c) A thorough discourse on the implications for both inference time and memory usage across distinct microcontroller platforms.

The remainder of this paper is organized as follows: Section II presents related works; Section III details the proposed models; Section IV describes the case study conducted to evaluate the proposed; Section V discusses the main results obtained; and, finally, Section VI presents the final considerations and promising paths for future work.

II. Related Works

The literature has witnessed a proliferation of proposed approaches aiming to estimate State of Health (SoH) in battery cells for e-bikes, with notable contributions found in various studies [4]. Drawing insights from a thorough literature review, these advancements have played a crucial role in shaping the development of the proposed approach.

2023 Symposium on Internet of Things (SIoT) | 979-8-3503-2943-8/23/$31.00 ©2023 IEEE | DOI: 10.1109/SIOT60039.2023.10390169

979-8-3503-2943-8/23/$31.00 ©2023 IEEE

Authorized licensed use limited to: International Institute of Information Technology-Raipur. Downloaded on January 27,2026 at 10:31:00 UTC from IEEE Xplore. Restrictions apply.

For instance, in their work [11], the authors introduced a mathematical model and application to accurately compute battery consumption and remaining range using external sources for route and elevation data. However, their focus was not centered on the analysis of SoH estimation.

Similarly, in this study by [10], a hardware-simulator for battery charger development was presented, encompassing various battery voltages of PMDs. Their approach demonstrated effectiveness through experimental validation but didn't address SoH prediction.

Another work by [12] showcased an electrical energy measurement device for e-bikes, capturing key variables like voltage, current, and power consumption. Despite its significance, this study didn't delve into SoH analysis.

In summary, the existing research landscape has spurred the emergence of innovative solutions that leverage TinyML algorithms to predict SoH in e-bikes, filling evident gaps in the field.

III. Proposed Approach

The proposed approach consists of evaluating four different architectures of machine learning models to be embedded. The first and second models are differentiated by the number of sensors. Additionally, the third and fourth insert a delay in the others already defined. In this way, it uses the set of models to predict the SoH, as shown in Figure 1. Therefore, a systematic exploration of neural network architectures was undertaken, encompassing four distinct models, each shedding light on the predictive potential of different variables. The proposed approach for exploration also created meticulous variations in the number of hidden layers and neurons within these layers, providing insights into how the approach impacts prediction performance.

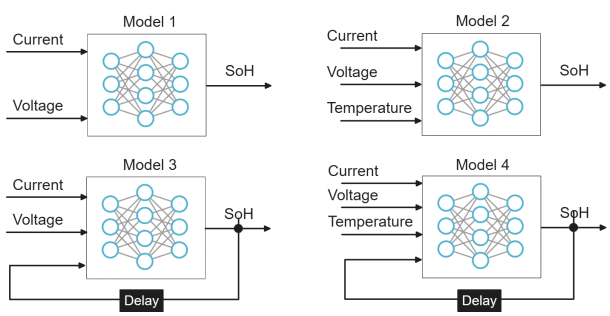

Fig. 1. Proposed Models overview.

In addition, the selection of these configurations was driven by a detailed analysis of the matrix of correlation, total and partial autocorrelations, consequently, facilitating the identification of optimal input parameters and feedback values. This approach ensured that the architectural configurations captured nuanced dynamics while enhancing predictive accuracy.

Finally, the approach exploration comprises four distinct configurations for each model, systematically varying the number of hidden layers and neurons within each layer. Specifically, the following configurations are examined:

- **Single Hidden Layer**: the first configuration involves a single hidden layer with 16 neurons. This configuration aims to evaluate the predictive capabilities of a relatively simple neural architecture. Denoted by $\{16\}$.
- **Two Hidden Layers**: the second architecture includes two hidden layers. The first layer encompasses 32 neurons, while the subsequent layer consists of 16 neurons.Denoted by $\{32, 16\}$.
- **Three Hidden Layers**: the third configuration uses three hidden layers with 64, 32 and 16 neurons respectively. Denoted by $\{64, 32, 16\}$.
- **Four Hidden Layers**: the fourth configuration introduces four hidden layers. These layers are structured with 128, 64, 32 and 16 neurons respectively. This deeper architecture seeks to capture intricate patterns and dependencies in the input data. Denoted by $\{128, 64, 32, 16\}$.

IV. Case Study

This case study aims to evaluate the feasibility of the proposed approach to predict SoH in a battery cell in e-bikes. The following subsections describe the performed procedures:

A. Instrumentation

In order to assess the proposed approach and validate its functioning, three development boards were considered ESP-WROOM-32 DEVKit V1 (**Xtensa® Dual-Core 32-bit LX6**), Arduino Nano 33 BLE Sense (**nRF52840**), and Arduino Portenta H7 (**STMicroelectronics® STM32H747XI Dual 32-bit Arm® Cortex®-M7 and Cortex®-M4**), according to the familiarity and availability of the authors with the technology. The specifications are illustrated in Table I.

TABLE I
Development board description.

Development board	Clock speed	RAM	Flash
ESP-WROOM-32 DEVKit V1	80/240 MHz	520 KB	4 MB
Arduino Nano 33 BLE Sense	64 MHz	256KB	1 MB
Arduino Portenta H7 (M4 core)	240 MHz	1 MB	2 MB
Arduino Portenta H7 (M7 core)	480 MHz	1 MB	2 MB

B. Preparation

For each microcontroller, the code was generated using the conversion of the TensorFlow Lite (TFLite) model into C/C++. This process involves the following steps: (1) extracting quantized parameters (weights, biases) from TFLite; (2) generating structural C/C++ code reflecting the model's architecture; (3) translating TFLite math operations to microcontroller-executable C/C++ instructions; (4) optimizing code for microcontroller's architecture by adjusting operations, using architecture-specific instructions, and efficient memory allocation; and (5) compiling code into executable binary for direct microcontroller execution. This binary encapsulates all necessary instructions and data structures for model execution. This transformation process bridges the gap between a quantized machine learning model and its functional deployment on resource-constrained microcontroller environments.

Authorized licensed use limited to: International Institute of Information Technology-Raipur. Downloaded on January 27,2026 at 10:31:00 UTC from IEEE Xplore. Restrictions apply.

Finally, the generated binary is then integrated into the microcontroller's development environment and loaded onto the device, in our case using the Arduino IDE. Once loaded, the model is ready to run, making inferences based on the input data.

1) Selected database: The embedded identification model proposed for estimating the SoH of e-Bikes batteries was developed using segmented data from training, validation, and testing datasets available in NASA's research center's publicly maintained online repository [13]. This dataset encompasses battery voltage, current, capacity, and internal resistance data. Capacity degradation of the selected batteries is depicted in Figure 2. Some capacity spikes in the figure occur due to self-charging during rest periods, leading to a rebound in available capacity.

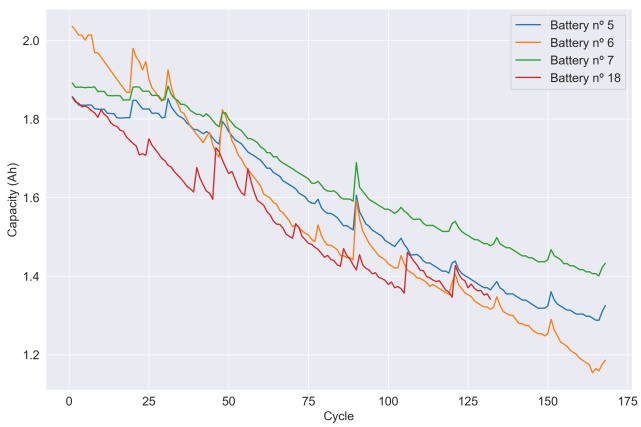

Fig. 2. State of Health degradation for cycle of NASA batteries.

2) Feature generated for addition in the dataset: a variable of importance for the predictive model is the SoH. However, this variable is not inherently available through regular usage of lithium-ion batteries. Nonetheless, these elusive values can be derived via Equation 1, which leverages battery capacity measurements.

$$SoH(\%) = \frac{Q_{act}}{Q_n} \cdot 100\% \tag{1}$$

where Q_n is the nominal capacity and Q_{act} is the actual battery capacity.

To accomplish this, capacity values are obtained through carefully controlled discharge tests. This testing procedure entails linking the battery to a controlled charging device, followed by the systematic and restrained depletion of battery energy until a predetermined minimum voltage threshold is reached. Throughout the test, both discharge current and battery voltage are meticulously monitored and recorded over time. The battery's capacity is determined by multiplying the average discharge current by the total duration of the discharge cycle. Hence it is crucial to account for battery efficiency, as it can lead to losses attributed to internal resistance and other chemical reactions during the discharge process.

C. Data Analysis

The data underwent two methods of analysis: (1) examining the correlation matrix to comprehend variable relationships, and (2) studying total and partial correlations of the target variable, SoH.

The correlation matrix unveiled significant insights about Current, Voltage, Temperature, and SoH. A weak positive correlation (0.08) emerged between current and voltage measurements, suggesting a mild association. A moderate negative correlation (-0.31) between current and temperature indicated a potential temperature decrease with increased current. A moderate positive correlation (0.16) between current and SoH suggested improved health with higher current. A strong negative correlation (-0.88) between voltage and temperature implied an inverse connection. Additionally, a moderate positive correlation (0.17) between voltage and SoH was observed, and a moderate negative correlation (-0.14) between temperature and SoH hinted at the system's sensitivity to thermal conditions. These relationships guided subsequent machine learning model development.

Furthermore, total and partial autocorrelation, provided insights into time series dependency patterns. Total autocorrelation showed all past values with a correlation of 1. Partial correlation indicated that the last 2 values also had a correlation of 1.

Based on these findings, a delay of 1 unit was introduced as feedback into the input of the predictive models for SoH estimation. This decision was influenced by the statistical significance of this lag. When correlation values fall below a designated threshold, the null hypothesis is rejected, indicating a genuine disparity among samples. This supports the choice of incorporating the delay into the models.

D. Data segregation and Model training

The data was divided, allocating 30% for testing and 70% for training. Within the 70%, 20% was assigned for validation, while 80% was utilized to train the machine learning model. Maintaining the statistical characteristics of the initial data set in the samples for training, testing and validation is crucial for the robustness of the results.

The optimizer used was Adam, with a learning rate equal to 0.0001, β_1 equal to 0.9, β_2 equal to 0.99 and ϵ equal to 10^{-7}. The batch size was configured to 16 and the model trained by 100 epochs. All these parameters were chosen by convenience after empirical experimentation.

E. Metrics evaluation

To evaluate and compare the models during the experiments, we used the Mean Squared Error (MSE), the Mean Absolute Error (MAE), and the R^2-Score.

F. Model Convert and Quantizer

To deploy the machine learning model on the microcontroller, it was necessary to reduce its size. To achieve this reduction, we adopted post-training quantization techniques

Authorized licensed use limited to: International Institute of Information Technology-Raipur. Downloaded on January 27,2026 at 10:31:00 UTC from IEEE Xplore. Restrictions apply.

that convert the model's parameters into two types: floating-point (float32) and integer (int8), with the latter representing lower precision. Additionally, we chose to use the TFLite format, specifically designed for embedded devices, to convert the quantized model. TFLite optimizes operations for resource-constrained environments, as is the case with the application under study.

V. Results and Discussion

This section aims to discuss the results obtained from the case studies described in the previous section. Thus, the analysis of the results of the different models shown in Table II reveals their respective strengths and deficits. Each architecture of the proposed models is detailed below: **Model 1 ({16})** demonstrated moderate MAE and MSE performance. While inference speed was relatively fast, its R2-score was the lowest among the models, indicating a weaker linear relationship. Its efficiency in terms of model size and energy consumption made it a balanced option between accuracy and computational resources. **Model 2 ({32, 16})** showed significant improvements in MAE and MSE, enhancing predictive capabilities. The higher R2-score highlighted a strong linear fit. Its quick inference time and the subsequent increase in model size and energy consumption should be considered when opting for this configuration. **Model 3 ({64, 32, 16})** continued to improve accuracy, achieving even lower MAE and MSE. The consistent high R2-score indicated good data adaptation. The notable reduction in inference time was advantageous, though the rise in energy consumption and model size needs careful assessment. **Model 4 ({128, 64, 32, 16})** achieved the best MAE and MSE results, reflecting the highest accuracy. However, its inference time was relatively slower, potentially limiting real-time scenarios. The substantial increase in model size and energy requirements might pose challenges in resource-constrained environments.

In summary, evaluating these models underscores the trade-off between complexity, accuracy, and computational efficiency. Complex models tend to offer higher accuracy at the cost of increased resource demands. Simpler models might excel in efficiency but could compromise accuracy. Model selection depends on system constraints, application goals, and specific precision and efficiency needs.

A. Model selection

Based on the metrics presented in Table II we can carry out a comparative evaluation to determine which architecture is best for each model. We opted for a weighted approach, taking into account various factors, in this study: accuracy ($Accuracy$), energy efficiency ($Energy$) and model size ($Size$). Assigning relative weights to these factors, since their importance can vary depending on the project's priorities, as shown in Equation 2.

$$Score = Accuracy \cdot 0.6 + Energy \cdot 0.1 + Size \cdot 0.3 \quad (2)$$

The scores results provide insights into the ranking and performance of different models based on their respective architectures. **Model 1 ({16})**, focusing solely on voltage and current, achieved the lowest evaluation score of 48.64. **Model 2 ({32, 16})**, incorporating voltage, current, and temperature, scored 51.06, demonstrating a slight increase in evaluation score compared to Model 1. Interestingly, **Model 3 ({64, 32, 16})**, which considered voltage, current, and feedback, yielded a similar evaluation score of 50.55, highlighting that the addition of feedback information contributed comparably to the model's performance as temperature did in Model 2. **Model 4 ({128, 64, 32, 16})**, the most complex architecture involving voltage, current, temperature, and feedback, obtained the highest evaluation score of 53.67, indicating its overall improved predictive capabilities.

From these results, it's evident that incorporating additional variables, such as temperature and feedback, can enhance the model's predictive performance. However, it's notable that the benefits of adding more variables might plateau after a certain point, as seen in the similar performance of Models 2 and 3. The results underscore the importance of carefully selecting variables to balance model complexity and performance. The evaluation scores provide a quantitative basis for choosing an appropriate model architecture based on the available data and desired predictive accuracy.

B. Embedded device performance evaluation

Table III shows the comparative evaluation of different development boards for predicting the state of battery health (SoH). Key metrics such as inference latency, RAM and Flash memory utilization were considered. Based on the results, the "NANO BLE SENSE" board emerged as the most promising option, presenting a remarkable balance between moderate inference latency, balanced memory resource utilization and additional features such as integrated sensor support and BLE connectivity. This thoughtful selection provides a robust basis for future battery SoH prediction research, maximizing the efficiency of computational resources while maintaining the required real-time performance.

In addition, the similarity in performance results between the quantized Float32 and Int8 models could be attributed to the specific characteristics of the models, the nature of the data, and the complexity of the task. Thus, the choice of quantization type in this study becomes indifferent, as both have similar metrics.

VI. Conclusion

This article introduced predictive techniques, leveraging deep learning and TinyML, to estimate the State of Health (SoH) of Lithium-Ion batteries in e-Bikes. Through comprehensive case studies and analysis, this study examined different model architectures and their performance metrics. The results showcased a interplay between model complexity, accuracy, and computational efficiency. While more intricate architectures yielded higher accuracy, they also demanded greater

Authorized licensed use limited to: International Institute of Information Technology-Raipur. Downloaded on January 27,2026 at 10:31:00 UTC from IEEE Xplore. Restrictions apply.

TABLE II
CONFUSION MATRIX FOR THE TEST SET.

Model 1	MAE	MSE	R2-score	Inference	Size	Tflite Int8	Tflite Float32	Energy Consumed	CO_2 Emission
$\{16\}$	0.192	0.052	0.129	117.5 μs	20847 B	2208 B	1736 B	$3.53{\cdot}10^{-2}$ kWh	$5.61{\cdot}10^{-3}$ Kg
$\{32, 16\}$	0.188	0.051	0.160	79.1 μs	32319	3408 B	4472 B	$3.18{\cdot}10^{-2}$ kWh	$5.04{\cdot}10^{-3}$ Kg
$\{64, 32, 16\}$	0.188	0.050	0.169	63.3 μs	63121	6288 B	13584 B	$1.71{\cdot}10^{-2}$ kWh	$2.72{\cdot}10^{-3}$ Kg
$\{128, 64, 32, 16\}$	0.187	0.050	0.172	80.3 μs	169873 B	15688 B	47832 B	$2.28{\cdot}10^{-2}$ kWh	$3.62{\cdot}10^{-3}$ Kg
Model 2	**MAE**	**MSE**	**R2-score**	**Inference**	**Size**	**Tflite Int8**	**Tflite Float32**	**Energy Consumed**	**CO_2 Emission**
$\{16\}$	0.185	0.049	0.192	135.4 μs	21039 B	2224 B	1800 B	$3.54{\cdot}10^{-2}$ kWh	$5.62{\cdot}10^{-3}$ Kg
$\{32, 16\}$	0.160	0.035	0.421	74.0 μs	32703 B	3440 B	4600 B	$2.07{\cdot}10^{-2}$ kWh	$3.28{\cdot}10^{-3}$ Kg
$\{64, 32, 16\}$	0.156	0.034	0.438	37.7 μs	63889 B	6352 B	13840 B	$2.25{\cdot}10^{-2}$ kWh	$3.57{\cdot}10^{-3}$ Kg
$\{128, 64, 32, 16\}$	0.154	0.033	0.447	121.9 μs	171409 B	15816 B	48344 B	$1.73{\cdot}10^{-2}$ kWh	$2.74{\cdot}10^{-3}$ Kg
Model 3	**MAE**	**MSE**	**R2-score**	**Inference**	**Size**	**Tflite Int8**	**Tflite Float32**	**Energy Consumed**	**CO_2 Emission**
$\{16\}$	$1.20{\cdot}10^{-4}$	$9.90\ {\cdot}10^{-6}$	0.99	116.4 μs	21039 B	2224 B	1800 B	$1.15{\cdot}10^{-2}$ kWh	$1.82{\cdot}10^{-3}$ Kg
$\{32, 16\}$	$1.61{\cdot}10^{-4}$	$9.92{\cdot}10^{-6}$	0.99	102.2 μs	32703 B	3440 B	4600 B	$2.08{\cdot}10^{-2}$ kWh	$3.30{\cdot}10^{-3}$ Kg
$\{64, 32, 16\}$	$2.64{\cdot}10^{-4}$	$10.0{\cdot}10^{-6}$	0.99	98.4 μs	63889 B	6352 B	13840 B	$0.94{\cdot}10^{-2}$ kWh	$1.50{\cdot}10^{-3}$ Kg
$\{128, 64, 32, 16\}$	$2.50{\cdot}10^{-4}$	$9.95{\cdot}10^{-6}$	0.99	76.8 μs	171409 B	15816 B	48344 B	$1.40{\cdot}10^{-2}$ kWh	$2.22{\cdot}10^{-3}$ Kg
Model 4	**MAE**	**MSE**	**R2-score**	**Inference**	**Size**	**Tflite Int8**	**Tflite Float32**	**Energy Consumed**	**CO_2 Emission**
$\{16\}$	$1.50{\cdot}10^{-4}$	$9.93\ {\cdot}10^{-6}$	0.99	146.9 μs	21231 B	2240 B	1800 B	$5.62{\cdot}10^{-3}$ kWh	$0.89{\cdot}10^{-3}$ Kg
$\{32, 16\}$	$2.49{\cdot}10^{-4}$	$10.0{\cdot}10^{-6}$	0.99	92.4 μs	33087 B	3472 B	4600 B	$14.84{\cdot}10^{-3}$ kWh	$2.35{\cdot}10^{-3}$ Kg
$\{64, 32, 16\}$	$2.95{\cdot}10^{-4}$	$9.98{\cdot}10^{-6}$	0.99	103.1 μs	64657 B	6416 B	13840 B	$10.64{\cdot}10^{-3}$ kWh	$1.68{\cdot}10^{-3}$ Kg
$\{128, 64, 32, 16\}$	$3.11{\cdot}10^{-4}$	$10.0{\cdot}10^{-6}$	0.99	109.3 μs	172945 B	15944 B	48344 B	$7.80{\cdot}10^{-3}$ kWh	$1.23{\cdot}10^{-3}$ Kg

TABLE III
PERFORMANCE EVALUATION FOR DIFFERENTS DEVELOPMENT BOARDS.

Device	Type	Inference	RAM Usage	Flash Usage
ESP32	Int8	193 μs	24.4 KB	376.36 KB
	Float32	64 μs	24.4 KB	377.25 KB
NANO BLE SENSE	Int8	196 μs	52.95 KB	248.1 KB
	Float32	192 μs	52.952 KB	249.26 KB
PORTENTA H7 M4	Int8	12 μs	66.4 KB	272.9 KB
	Float32	16 μs	66.4 KB	274.1 KB
PORTENTA H7 M7	Int8	21 μs	71.49 KB	298.0 KB
	Float32	25 μs	71.49 KB	299.1KB

computational resources. The evaluation process, incorporating accuracy, energy efficiency, and model size, provided a quantitative basis for selecting the optimal model architecture. Furthermore, the performance evaluation of embedded devices shed light on hardware capabilities, aiding in device selection tailored to project-specific needs.

Future research could explore integrating predictive techniques with e-Bike Battery Management Systems (BMS), addressing real-time communication challenges. Further optimization of model architectures and comparisons with traditional methods would offer insights into enhancing accuracy and practicality.

ACKNOWLEDGMENT

This work was partly financed by the Brazilian fostering agency CNPq (National Council for Scientific and Technological Development), Process No. 405531/2022-2.

REFERENCES

[1] F. Pallonetto, "Towards a more sustainable mobility," in *Handbook of Computational Social Science for Policy*, pp. 465–486, Springer International Publishing Cham, 2023.

[2] V. d. C. Paes, C. H. M. Pessoa, R. P. Pagliusi, C. E. Barbosa, M. Argôlo, Y. O. de Lima, H. Salazar, A. Lyra, and J. M. de Souza, "Analyzing the challenges for future smart and sustainable cities," *Sustainability*, vol. 15, no. 10, p. 7996, 2023.

[3] L. He, H. Jing, Y. Zhang, P. Li, and Z. Gu, "Review of thermal management system for battery electric vehicle," *Journal of Energy Storage*, vol. 59, p. 106443, 2023.

[4] C. Contò and N. Bianchi, "E-bike motor drive: A review of configurations and capabilities," *Energies*, vol. 16, no. 1, p. 160, 2022.

[5] Y. Zhou, Y. Yu, Y. Wang, B. He, and L. Yang, "Mode substitution and carbon emission impacts of electric bike sharing systems," *Sustainable Cities and Society*, vol. 89, p. 104312, 2023.

[6] K. See, G. Wang, Y. Zhang, Y. Wang, L. Meng, X. Gu, N. Zhang, K. Lim, L. Zhao, and B. Xie, "Critical review and functional safety of a battery management system for large-scale lithium-ion battery pack technologies," *International Journal of Coal Science & Technology*, vol. 9, no. 1, p. 36, 2022.

[7] J. Gupta, R. Kushwaha, and B. Singh, "Improved power quality charger based on bridgeless canonical switching cell converter for a light electric vehicle," *IEEE Transactions on Industry Applications*, 2023.

[8] L. Charfeddine and M. Umlai, "Ict sector, digitization and environmental sustainability: A systematic review of the literature from 2000 to 2022," *Renewable and Sustainable Energy Reviews*, vol. 184, p. 113482, 2023.

[9] I. M. Silva, L. A. Guedes, and F. Vasques, "Performance evaluation of a compression algorithm for wireless sensor networks in monitoring applications," in *2008 IEEE international conference on emerging technologies and factory automation*, pp. 672–678, IEEE, 2008.

[10] Y. Abadade, A. Temouden, H. Bamoumen, N. Benamar, Y. Chtouki, and A. S. Hafid, "A comprehensive survey on tinyml," *IEEE Access*, 2023.

[11] E. Burani, G. Cabri, and M. Leoncini, "An algorithm to predict e-bike power consumption based on planned routes," *Electronics*, vol. 11, no. 7, p. 1105, 2022.

[12] P. Garg, D. Bansal, S. Khan, and S. Bhattacharya, "Development of energy measurement system for electrical vehicle battery using arduino," in *Flexible Electronics for Electric Vehicles: Select Proceedings of FlexEV—2021*, pp. 457–464, Springer, 2022.

[13] B. Saha, E. Koshimoto, C. C. Quach, E. F. Hogge, T. H. Strom, B. L. Hill, S. L. Vazquez, and K. Goebel, "Battery health management system for electric uavs," in *2011 aerospace conference*, pp. 1–9, IEEE, 2011.

Authorized licensed use limited to: International Institute of Information Technology-Raipur. Downloaded on January 27,2026 at 10:31:00 UTC from IEEE Xplore. Restrictions apply.